TC-DEL
TC-TEL

PC TC TOP sr 1/2x18 – 42 W

PC TOP compact

Product description

- CELMA Energy Efficiency Index A2
- Nominal life time up to 50,000 h (at ta 50 °C with a failure rate max. 0.2 % per 1,000 h)
- Large temperature range (for values see table)
- No tools required for installation
- Integrated terminal cover and strain relief
- 3 separate strain reliefs
- Constant luminous flux irrespective of fluctuations in mains voltage
- For luminaires of protection class I and protection class II
- Automatic start after replacement of defective lamps
- Safety shutdown of defective lamps and at end of life
- For emergency lighting systems as per EN 50172
- For luminaires with M and MM as per EN 60598, VDE 0710 and VDE 0711
- Temperature protection as per EN 61347-2-3 C5e

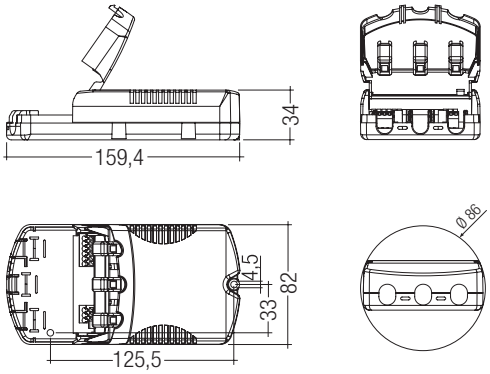

Technical data

AC voltage range	198 – 264 V
DC voltage range	176 – 280 V (Lamp start ≥ 198 V DC)
Overvoltage protection	320 V AC, 1 h
Defined warm start	≤ 1.6 s
Operating frequency	≥ 40 kHz
Type of protection	IP20

Standards, page 3

Wiring diagrams and installation examples, page 5

Ordering data

Type	Article number	Packaging carton	Packaging pallet	Weight per pc.
For luminaires with 1 lamp				
PC 1x18 TC TOP sr	**28000077**	25 pc(s).	550 pc(s).	0.153 kg
PC 1x26-42 TC TOP sr	**28000079**	25 pc(s).	550 pc(s).	0.154 kg
For luminaires with 2 lamps				
PC 2x18 TC TOP sr	**28000078**	25 pc(s).	550 pc(s).	0.153 kg
PC 2x26 TC TOP sr	**28000080**	25 pc(s).	550 pc(s).	0.159 kg

Specific technical data

Lamp wattage	Lamp type	**Type**	Article number	Dimensions L x W x H	Lamp power	Circuit power	EEI	Current at 50 Hz		λ at 50 Hz		tc point max.	Ambient temperature ta	tc / ta for ≥ 50,000 h
								220 V	240 V	220 V	240 V			
For luminaires with 1 lamp														
1 x 18 W	TC-DEL	**PC 1x18 TC TOP sr**	28000077	159.4 x 82 x 34 mm	16.5 W	18.2 W	A2	0.085 A	0.080 A	0.97	0.95	75 °C	-25 ... 65 °C	70/60 °C
1 x 18 W	TC-TEL	**PC 1x18 TC TOP sr**	28000077	159.4 x 82 x 34 mm	16.5 W	18.2 W	A2	0.085 A	0.080 A	0.97	0.95	75 °C	-25 ... 65 °C	70/60 °C
1 x 26 W	TC-DEL	**PC 1x26-42 TC TOP sr**	28000079	159.4 x 82 x 34 mm	24.0 W	26.8 W	A2	0.127 A	0.119 A	0.96	0.94	70 °C	-25 ... 60 °C	65/55 °C
1 x 26 W	TC-TEL	**PC 1x26-42 TC TOP sr**	28000079	159.4 x 82 x 34 mm	24.0 W	26.8 W	A2	0.127 A	0.119 A	0.96	0.94	70 °C	-25 ... 60 °C	65/55 °C
1 x 36 W	TC-TEL	**PC 1x26-42 TC TOP sr**	28000079	159.4 x 82 x 34 mm	32.0 W	35.1 W	A2	0.164 A	0.154 A	0.97	0.95	70 °C	-25 ... 60 °C	65/55 °C
1 x 42 W	TC-TEL	**PC 1x26-42 TC TOP sr**	28000079	159.4 x 82 x 34 mm	42.0 W	47.1 W	A2	0.218 A	0.204 A	0.98	0.96	75 °C	-25 ... 60 °C	65/50 °C
For luminaires with 2 lamps														
2 x 18 W	TC-DEL	**PC 2x18 TC TOP sr**	28000078	159.4 x 82 x 34 mm	33.0 W	34.7 W	A2	0.163 A	0.152 A	0.97	0.95	80 °C	-25 ... 65 °C	70/55 °C
2 x 18 W	TC-TEL	**PC 2x18 TC TOP sr**	28000078	159.4 x 82 x 34 mm	33.0 W	34.7 W	A2	0.163 A	0.152 A	0.97	0.95	80 °C	-25 ... 65 °C	70/55 °C
2 x 26 W	TC-DEL	**PC 2x26 TC TOP sr**	28000080	159.4 x 82 x 34 mm	48.5 W	53.1 W	A2	0.246 A	0.230 A	0.98	0.96	75 °C	-25 ... 60 °C	70/50 °C
2 x 26 W	TC-TEL	**PC 2x26 TC TOP sr**	28000080	159.4 x 82 x 34 mm	48.5 W	53.1 W	A2	0.246 A	0.230 A	0.98	0.96	75 °C	-25 ... 60 °C	70/50 °C

Standards
EN 55015
EN 60929
EN 61000-3-2
EN 61000-3-3
EN 61347-2-3
EN 61347-2-4
EN 61547
according to EN 50172

Lamp starting characteristics
Warm start
Starting time ≤ 1.6 s with AC and DC operation
Cathode heating will be reduced after preheat time

AC operation
Mains voltage:
220–240 V 50/60 Hz
198–264 V 50/60 Hz including safety tolerance (±10 %)
202–254 V 50/60 Hz including performance tolerance (+6 % / -8 %)

DC operation
Mains voltage:
220–240 V 0 Hz
198–280 V 0 Hz certain lamp start
176–280 V 0 Hz operating range
Light output level in DC operation: 100 %

Emergency lighting
Use in emergency lighting installations according to EN 50172 or for emergency luminaires according to EN 61347-2-3 appendix J.

Instant start after mains interruption < 0.5 s

Mains current for defective or missing lamps at DC operation < 10 mA.

Mains current in DC operation

Type	Lamp type	Wattage	Mains current at U_n = 220 V_{DC}	Mains current at U_n = 240 V_{DC}
PC 1x18 TC TOP sr	TC-DEL	1x18 W	85 mA	80 mA
	TC-TEL	1x18 W	85 mA	80 mA
PC 1x26-42 TC TOP sr	TC-DEL	1x26 W	127 mA	119 mA
	TC-TEL	1x26 W	127 mA	119 mA
	TC-TEL	1x32 W	164 mA	154 mA
	TC-TEL	1x42 W	218 mA	204 mA
PC 2x18 TC TOP sr	TC-DEL	2x18 W	163 mA	152 mA
	TC-TEL	2x18 W	163 mA	152 mA
PC 2x26 TC TOP sr	TC-DEL	2x26 W	264 mA	230 mA
	TC-TEL	2x26 W	264 mA	230 mA

Harmonic distortion in the mains supply

Type	Lamp type	Wattage	THD at 230 V / 50 Hz
PC 1x18 TC TOP sr	TC-DEL	1x18 W	< 10 %
	TC-TEL	1x18 W	< 10 %
PC 1x26–42 TC TOP sr	TC-DEL	1x26 W	< 10 %
	TC-TEL	1x26 W	< 10 %
	TC-TEL	1x32 W	< 10 %
	TC-TEL	1x42 W	< 10 %
PC 2x18 TC TOP sr	TC-DEL	2x18 W	< 10 %
	TC-TEL	2x18 W	< 10 %
PC 2x26 TC TOP sr	TC-DEL	2x26 W	< 10 %
	TC-TEL	2x26 W	< 10 %

Output voltage

Type	Lamp type	Wattage	U_{out}
PC 1x18 TC TOP sr	TC-DEL	1x18 W	250 V
	TC-TEL	1x18 W	250 V
PC 1x26–42 TC TOP sr	TC-DEL	1x26 W	250 V
	TC-TEL	1x26 W	250 V
	TC-TEL	1x32 W	250 V
	TC-TEL	1x42 W	250 V
PC 2x18 TC TOP sr	TC-DEL	2x18 W	250 V
	TC-TEL	2x18 W	250 V
PC 2x26 TC TOP sr	TC-DEL	2x26 W	250 V
	TC-TEL	2x26 W	250 V

Ballast lumen factor (EN 60929 8.1)

Type	Lamp type	Wattage	AC/DC-BLF at U = 198–254 V, 25 °C
PC 1x18 TC TOP sr	TC-DEL	1x18 W	1.00
	TC-TEL	1x18 W	1.00
PC 1x26–42 TC TOP sr	TC-DEL	1x26 W	1.00
	TC-TEL	1x26 W	1.00
	TC-TEL	1x32 W	1.00
	TC-TEL	1x42 W	1.00
PC 2x18 TC TOP sr	TC-DEL	2x18 W	1.00
	TC-TEL	2x18 W	1.00
PC 2x26 TC TOP sr	TC-DEL	2x26 W	1.00
	TC-TEL	2x26 W	1.00

Energy class: CELMA EEI = A2[1)]
Maximum energy efficiency:
Right from the early stages in the development of xitec technology the focus has always been on achieving maximum energy efficiency. In conjunction with Smart Heating Technology, PC TC TOP sr is rated in the best possible efficiency class of A2 that CELMA provides for ballasts with a constant luminous flux.

[1)] according to the EU directives on ecodesign requirements (EC) No. 245/2009 and (EC) No. 347/2010

Temperature range

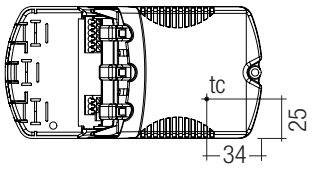

PC TC TOP sr

The ballast life duration is related to the ambient temperature ta.
The relation of tc to ta temperature depends also on the luminaire design. If the measured tc temperature is approx. 5 K below tc max. or higher, ta temperature should be checked and eventually critical components (e.g. ELCAP) measured. Detailed information on request.

PC TC TOP sr is designed for an average service life of 50,000 (at ta for ≥ 50,000 h) hours under reference conditions and with a failure probability of less than 10 %. This corresponds to an average failure rate of 0.2 % for every 1,000 hours of operation.

Humidity: 5 % up to max. 85 %, not condensed (max. 56 days/year at 85 %)

Storage temperature: -40 °C up to max. +80 °C

The devices have to be within the specified temperature range (ta) before they can be operated.

Expected lifetime

Type	Lamp type	Lamp power	ta	40 °C	50 °C	55 °C	60 °C	65 °C
PC 1x18 TC TOP sr	TC-DEL TC-TEL	1x18 W 1x18 W	tc	50 °C	60 °C	65 °C	70 °C	75 °C
			Lifetime	> 100,000 h	> 100,000 h	70,000 h	50,000 h	40,000 h
PC 1x26–42 TC TOP sr	TC-DEL TC-TEL	1x26 W 1x26 W	tc	50 °C	60 °C	65 °C	70 °C	x
			Lifetime	> 100,000 h	85,000 h	60,000 h	45,000 h	x
	TC-TEL	1x32 W	tc	50 °C	60 °C	65 °C	70 °C	x
			Lifetime	> 100,000 h	75,000 h	50,000 h	40,000 h	x
	TC-TEL	1x42 W	tc	55 °C	65°C	70 °C	75 °C	x
			Lifetime	90,000 h	50,000 h	40,000 h	30,000 h	x
PC 2x18 TC TOP sr	TC-DEL TC-TEL	2x18 W 2x18 W	tc	55°C	65 °C	70 °C	75 °C	80 °C
			Lifetime	> 100,000 h	70,000 h	50,000 h	40,000 h	30,000 h
PC 2x26 TC TOP sr	TC-DEL TC-TEL	2x26 W 2x26 W	tc	55 °C	65 °C	70 °C	75 °C	x
			Lifetime	90,000 h	50,000 h	35,000 h	25,000 h	x

x = not permitted

Maximum loading of automatic circuit breakers

Automatic circuit	C10	C13	C16	C20	B10	B13	B16	B20	Inrush current	
Installation cross section	1.5 mm²	1.5 mm²	1.5 mm²	2.5 mm²	1.5 mm²	1.5 mm²	1.5 mm²	2.5 mm²	I_{max}	time
PC 1x18 TC TOP sr	48	72	160	160	24	36	80	80	14 A	200 µs
PC 1x26–42 TC TOP sr	24	38	62	66	12	19	31	33	17 A	210 µs
PC 2x18 TC TOP sr	36	54	76	88	18	27	38	44	17 A	200 µs
PC 2x26 TC TOP sr	24	38	62	66	12	19	31	33	21 A	160 µs

Wiring advice

The lead length is dependant on the capacitance of the cable.

Ballast	Terminal		Maximum capacitance allowed	
Type	Cold	Hot	Cold	Hot
PC 1xx TC TOP sr	4, 5	8, 9	200 pF	100 pF
PC 2xx TC TOP sr	4, 5, 6, 7	8, 9	200 pF	100 pF

With standard solid wire 0.5/0.75 mm² the capacitance of the lead is 30–80 pF/m. This value is influenced by the way the wiring is made. Lamp connection should be made with symmetrical wiring.

To avoid the damage of the control gear, the wiring must be protected against short circuits to earth (sharp edged metal parts, metal cable clips, louver, etc.)

Installation instructions

Mains supply wires

Wiring type and cross section
The wiring can be in flexible cable with ferrules or solid with a cross section of 0.5–1.5 mm².
Strip 9.5 mm of insulation from the cables to ensure perfect operation of the push-wire terminals.
Use one wire for each terminal connector only.
Use each strain relief channel for one cable only.

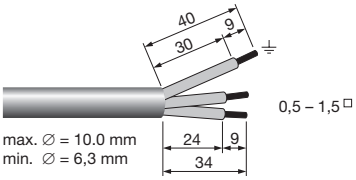

Lamp wires

Wiring type and cross section
The wiring can be in flexible cable with ferrules or solid with a cross section of 0.5–1.5 mm².
Strip 8.5–9.5 mm of insulation from the cables to ensure perfect operation of the push-wire terminals.
Use one wire for each terminal connector only.
Use each strain relief channel for one cable only.

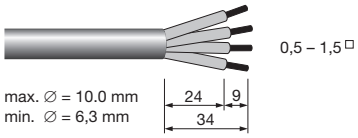

Fixing conditions

Dry, acidfree, oilfree, fatfree. It is not allowed to exceed the maximum ambient temperature (ta) stated on the device. Minimum distances stated below are recommendations and depend on the actual luminaire. Is not suitable for fixing in corner.

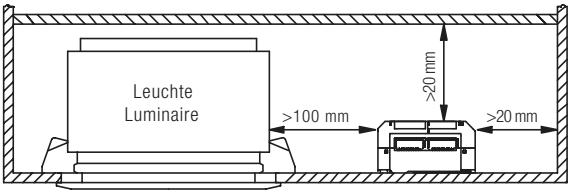

The mounting of the device with the aid of the mounting hole inside the housing is only allowed with screws which are not electrically conducting.

Detailed monting instruction see on www.tridonic.com → „Technical Data“.

RFI

- Connection to the lamps of the “hot leads” must be kept as short as possible
- Mains leads should be kept apart from lamp leads
- Do not run mains leads adjacent to the electronic ballast
- Twist the lamp leads
- Keep the distance of lamp leads from the metal work as large as possible
- Ballast must be earthed
- Keep the mains leads inside the luminaire as short as possible

Defective lamp

If a lamp is defective, the ballast switches off and goes into standby. Switch off tested according to EN 61347-2-3 17.3 (EoL-Test 2). There is an automatic restart once the lamp has been changed.

Release of the wiring

Press down the “push button” and remove the cable from front.

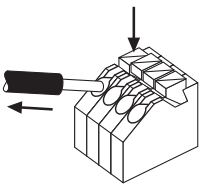

Isolation and electric strength testing of luminaires

Electronic devices can be damaged by high voltage. This has to be considered during the routine testing of the luminaires in production.

According to IEC 60598-1 Annex Q (informative only!) or ENEC 303-Annex A, each luminaire should be submitted to an isolation test with 500 V_{DC} for 1 second. This test voltage should be connected between the interconnected phase and neutral terminals and the earth terminal.
The isolation resistance must be at least 2 MΩ.

As an alternative, IEC 60598-1 Annex Q describes a test of the electrical strength with 1500 V_{AC} (or 1.414 x 1500 V_{DC}). To avoid damage to the electronic devices this test must not be conducted.

Glow-wire test

according to EN 60598-1 with increased temperature of 850 °C passed.

Additional information

Additional technical information at
www.tridonic.com → Technical Data

Guarantee conditions at
www.tridonic.com → Services

No warranty if device was opened.

Wiring diagrams

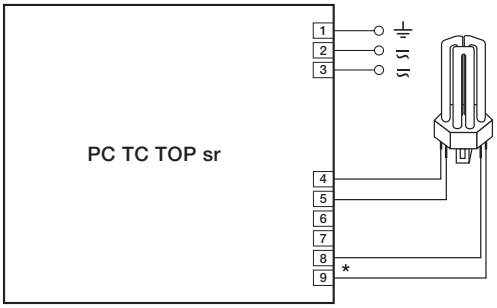

* Leads 8, 9 max. 1.0 m (< 100 pF)
Leads 4, 5 max. 2.0 m (< 200 pF)
For luminaires of protection class 1: Earthing via earth terminal (to IEC 60598)
For luminaires of protection class 2: No earthing required

PC 1x18 TC TOP sr
PC 1x26–42 TC TOP sr

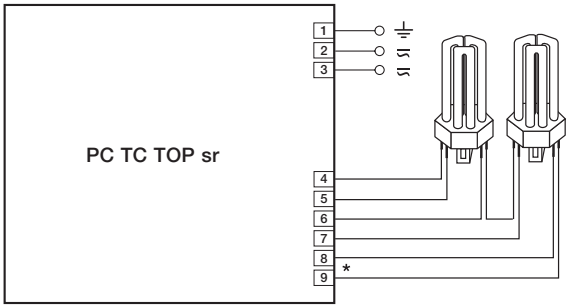

* Leads 8, 9 max. 1.0 m (< 100 pF)
Leads 4, 5, 6, 7 max. 2.0 m (< 200 pF)
For luminaires of protection class 1: Earthing via earth terminal (to IEC 60598)
For luminaires of protection class 2: No earthing required

PC 2x18 TC TOP sr
PC 2x26 TC TOP sr